Streamer technology air purifier Air Conditioning Technical Data

MC30YV



MC30YVM

TABLE OF CONTENTS

MC30YV

1	Features	4
	MC30YV	4
2	Specifications	5
3	Dimensional drawings	6
4	Wiring diagrams	8
	Wiring Diagrams - Single Phase	8

1 Features

1 - 1 MC30YV

Powerful air purification

1

› Pure air thanks to Daikin 'Catch and Clean' approach in decomposing harmful substances

› High performance HEPA filter with no need to change for 10 years
› One of the most silent Air Purifier range on the European market



STREAMER

Flash Streamer

2 Specifications

2 - 1 MC30YV

Technical specifications					MC30YVM
Type					Air Purifier
Application					Floor standing type
Casing	Colour				White
Dimensions	Unit	Height		mm	450
		Width		mm	270
		Depth		mm	270
	Packed unit	Height		mm	350
		Width		mm	565
		Depth		mm	345
Weight	Unit			kg	5.8
	Packed unit			kg	8
Applicable room area				m^2	23 **(1)** / 46 **(2)**
CADR				m^3/h	180 **(3)**
Air purifying operation	Power input	Turbo		kW	0.025
		M		kW	0.015
		Silent		kW	0.008
Sound pressure level **(4)**	Air purifying opera-tion	Turbo		dBA	37
		Medium		dBA	27
		Silent		dBA	19
Fan	Type				Multi Blade Fan (Sirocco fan)
	Air flow rate	Air purifying opera-tion	Turbo	m^3/h	180
			Medium	m^3/h	120
			Silent	m^3/h	60
Fan motor	Speed	Drive			Direct drive
Dust collecting method					Electrostatic HEPA filter
Deodorizing method					Flash streamer + Deodorizing catalyst
Air filter	Type				Polyethylene terephthalate net
Sign	Item	01			Child proof lock lamp / ON/OFF lamp / Streamer lamp / Sleep mode

Standard accessories: Electrostatic HEPA filter; Quantity: 1; **(5)**

Standard accessories: Deodorising filter; Quantity: 1;

Standard accessories: Operation manual; Quantity: 1;

Electrical specifications				MC30YVM
Power cord			m	1.8
Power supply	Phase			1~
	Frequency		Hz	50/60
	Voltage		V	220-240/220-230
	Plug	Type		C
Running current	Air purifying oper-ation	Turbo	A	0.13
		Medium	A	0.09
		Silent	A	0.08

(1)The applicable room area is appropriate for operating the unit of maximum fan speed (HH). Applicable room area indicates the space where a certain amount of dust particles can be remover in 30 minutes. (JEM 1467) |
(2)The applicable room area is appropriate for operating the unit of maximum fan speed (HH). Applicable room area was calculated in accordance with NRCC-54013 standard using cigarette smoke CADR that was tested accoring to JEM1467. |
(3)Converted to CADR standards from test values in accordance with JEM1467. |
(4)Operating sound levels are the average of values measured at 1m away from the front, left, right and top of the unit. (These are equal to the values in an anechoic chamber) |
(5)Electrostatic HEPA filter is attached in the unit. |
(6)Other function : Auto-restart function.

3 Dimensional drawings

3 - 1 Dimensional Drawings

3

MC30YV

• Outside size

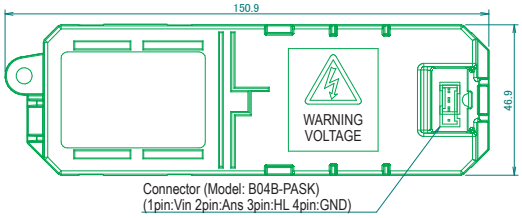

• Main specifications

Items			Contents
Outside	Outside size		150.9×46.9×27.5mm
	Weight		100g
Material of resin	Material		ABS
	Flame retardance		UL94-5VA
	Tracking index		Over CTI600V
Applicable laws			Electrical Appliance and Material Safety Act
			IEC60335-1(4th), IEC60335-2-65(4th)
Ambient conditions	Storage temperature		-25~70 (Non-Energization)
	Operating ambient temperature		-10~60 (Energization)
	Operating ambient humidity		5~95%RH (No dew deposit)
Basic specifications	Input voltage		14V±5%
	Maximum output voltage		6.5±0.5kV
	Rating output voltage		5.0±0.5kV
	Rating output current	Hi	55.5μA±10%
		Lo	10μA±10%
	ON/OFF		Inputted voltage into Vin (ON/OFF)
	Hi ⇔ Lo Switching		Inputted 5V into HL (Loe tap)
	Current monitor		Yes
	Detectable over current		Yes
	Detectable low voltage		Under 3kV
Generation amount of Ozone			4.26ml/hr (Hi 14±2□ 50±10%RH)
Method of mounting			Fixing by the right and left hook
			Fixing by the screw section

• Method of mounting

Don't blockage the vent of streamer unit.
Ensure the exit wind speed 0.2m/sec of the vent.
Ensure the spatial distance 8.5mm over at the vent of streamer unit.

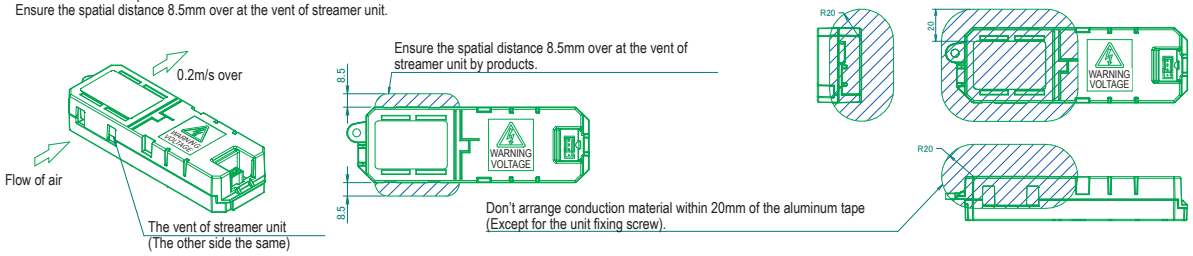

3D095530G

MC30YV

・Required installation space (If installed on the floor)

NOTE:
1)At least 1000
away from ceiling

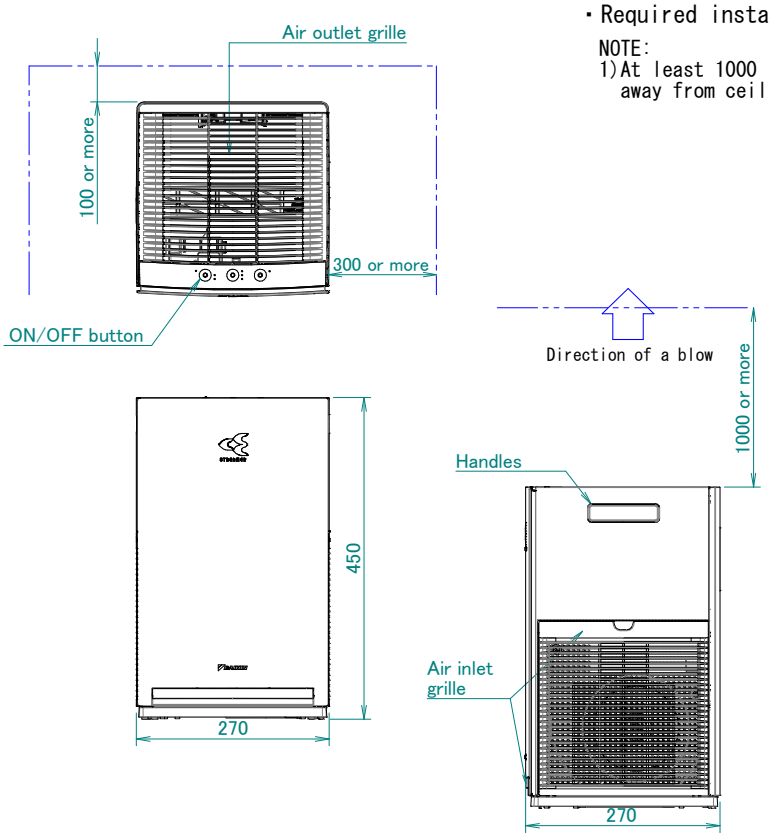

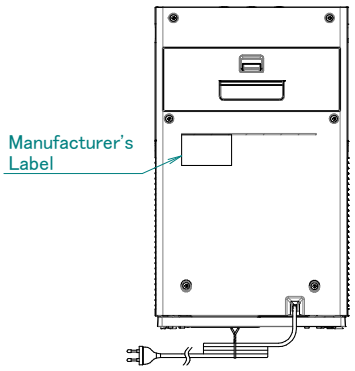

Power supply cord
Plug type : C-type
Type of cordage : H05VVH2-F
Cross Section Area : 0.75mm²
No. of conductors : 2
Length outside machine : 1800±50

3D138196

3 Dimensional drawings

3 - 1 Dimensional Drawings

MC30YV

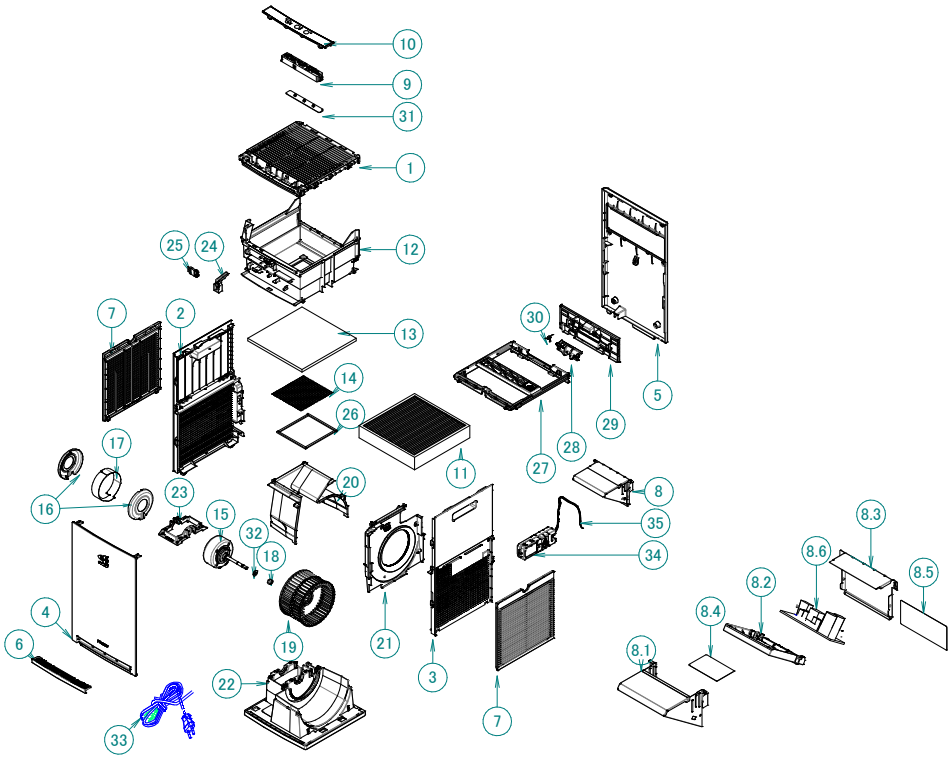

NO	DESCRIPTION
1	DISCH.GRILLE ASSY INS
2	LEFT SIDE PANEL(RESIN)
3	RIGHT SIDE PANEL(RESIN)(ASSY)
4	FRONT PANEL(RESIN)
5	REAR PANEL(RESIN)
6	AIR FILTER(PRE FILTER FRONT)
7	AIR FILTER (PRE FILTER SIDE)
8	EL.COMPO.BOX BOTTOM ASSY
8.1	EL.COMPO.BOX BOTTOM(SHIELD PLATE)
8.2	EL.COMPO.MOUNTING PLATE(RESIN)
8.3	EL.COMPO.BOX UPPER COVER(METAL)
8.4	INSULATION SHEET (EL COMPO BOX)
8.5	INSULATION SHEET (EL COMPO COVER)
8.6	PCB ASSY MAINBOARD
9	INDICATION LAMP COVER
10	BRAID INDICATION ASSY
11	HIGH EFFICIENCY PARTICULATE FILTER (DUST COLLECTION FILTER)
12	CASING FRAME
13	DEODORIZING FILTER
14	AIR PROTECTION NET
15	AC FAN MOTOR
16	FRONT PLATE
17	SIDE PLATE
18	HEXAGON NUT
19	SIROCCO FAN
20	FAN SCROLL TOP
21	FAN SCROLL SIDE
22	BOTTOM PANEL
23	MOTOR MOUNTING PLATE
24	LEVER
25	SWITCH
26	SEALING MATERIAL
27	RESIN CASE (DEODORIZING FILTER)
28	SWITCH (DEODORIZING FILTER)
29	COVER (DEODORIZING FILTER)
30	WIRE SPRING
31	PCB ASSY DISPLAY
32	STRENGTHENING PLATE
33	POWER CABLE
34	STREAMER
35	WIRE HARNESS (FOR STREAMER)

3D138344

4 Wiring diagrams

4 - 1 Wiring Diagrams - Single Phase

MC30YV

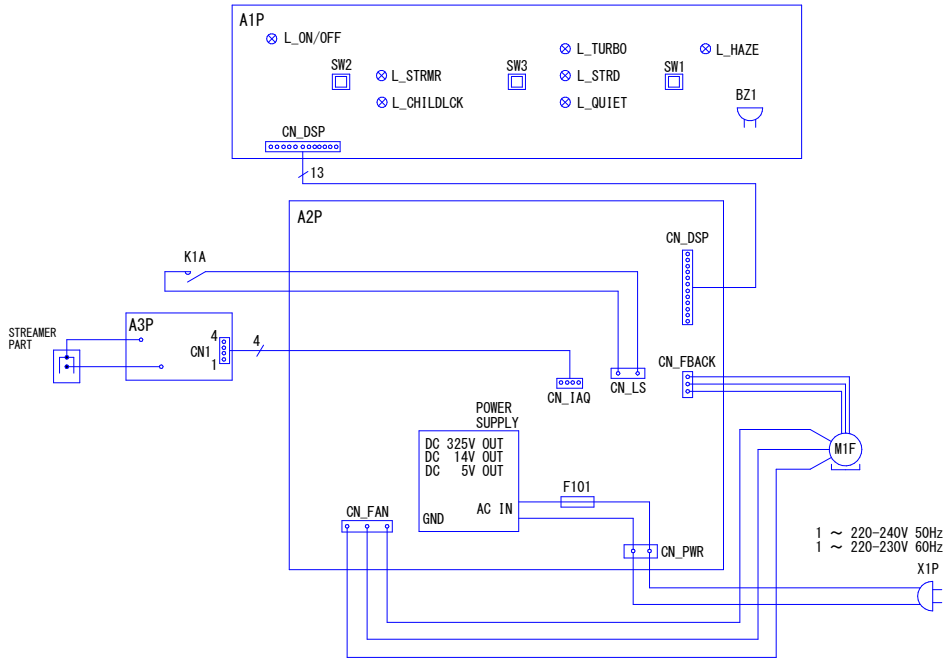

BZ1	BUZZER	L_ON/OFF	LED (ON/OFF:BLUE)	F101	FUSE (250V, 3.15A)
A1P	PRINTED CIRCUIT BOARD (DISPLAY)	L_STRMR	LED (STREAMER:BLUE)	M1F	FAN MOTOR
A2P	PRINTED CIRCUIT BOARD (MAINBOARD)	L_CHILDLCK	LED (CHILD PROOF LOCK:BLUE)	K1A	LIMIT SWITCH
A3P	PRINTED CIRCUIT BOARD (HIGH VOLTAGE POWER SUPPLY)	L_QUIET	LED (QUIET:BLUE)	X1P	POWER SUPPLY PLUG
SW1	MODE SWITCH	L_STRD	LED (STANDARD:BLUE)		
SW2	ON/OFF SWITCH	L_TURBO	LED (TURBO:BLUE)		
SW3	FAN SPEED SWITCH	L_HAZE	LED (HAZE/SLEEP:BLUE)		

3D137376

Daikin Europe N.V. Naamloze Vennootschap · Zandvoordestraat 300 · 8400 Oostende · Belgium · www.daikin.eu · BE 0412 120 336 · RPR Oostende (Responsible Editor)

EEDEN22 04/2022

The present publication is drawn up by way of information only and does not constitute an offer binding upon Daikin Europe N.V. / Daikin Central Europe HandelsGmbH. Daikin Europe N.V. / Daikin Central Europe HandelsGmbH have compiled the content of this publication to the best of their knowledge. No express or implied warranty is given for the completeness, accuracy, reliability or fitness for particular purpose of its content and the products and services presented therein. Specifications are subject to change without prior notice. Daikin Europe N.V. / Daikin Central Europe HandelsGmbH explicitly rejects any liability for any direct or indirect damage, in the broadest sense, arising from or related to the use and/or interpretation of this publication. All content is copyrighted by Daikin Europe N.V.